PAV170.1.M

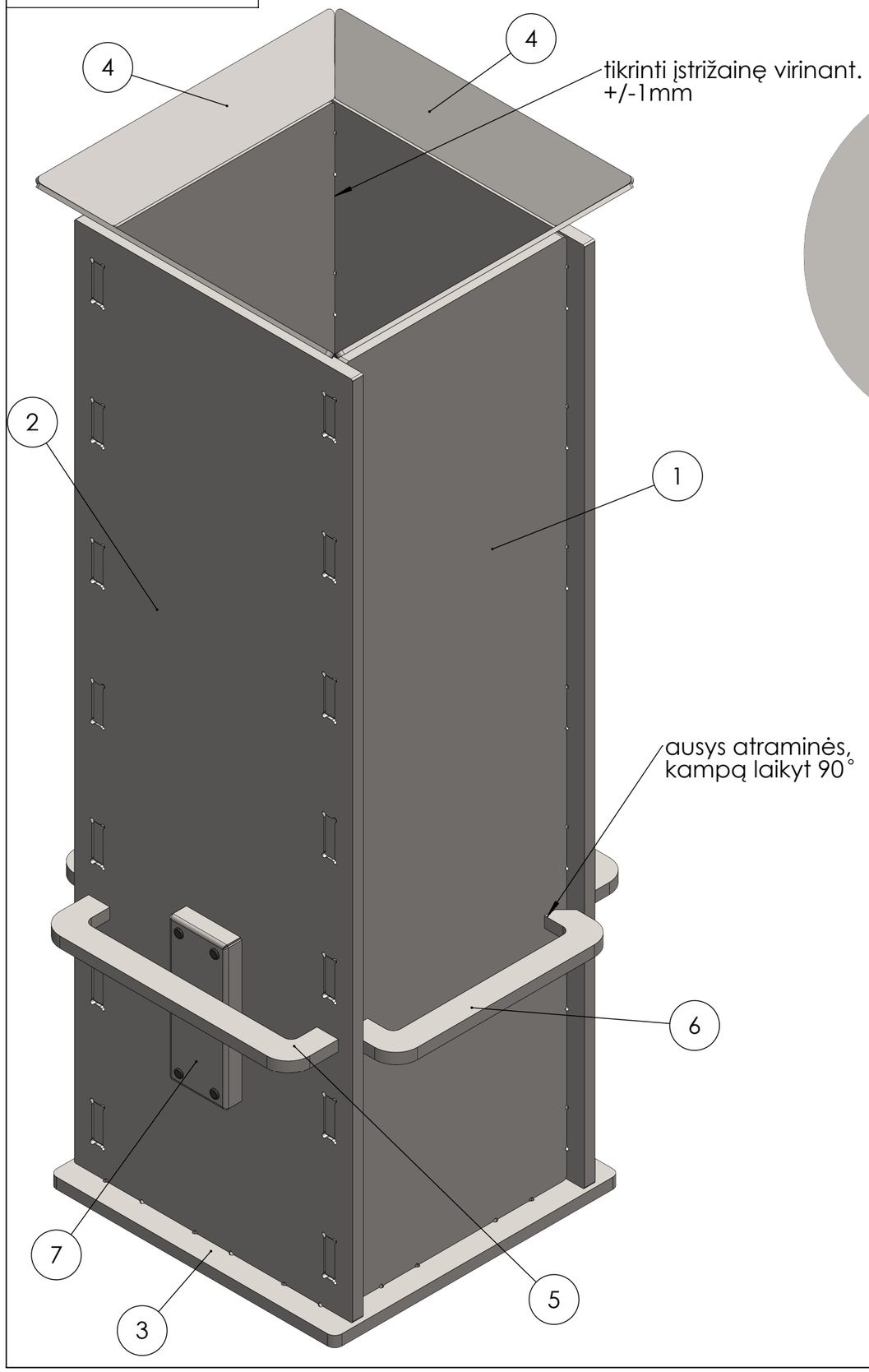

DETAIL C
SCALE 1 : 2

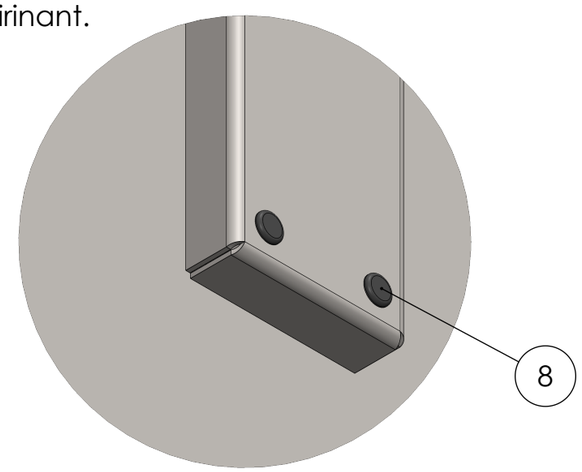

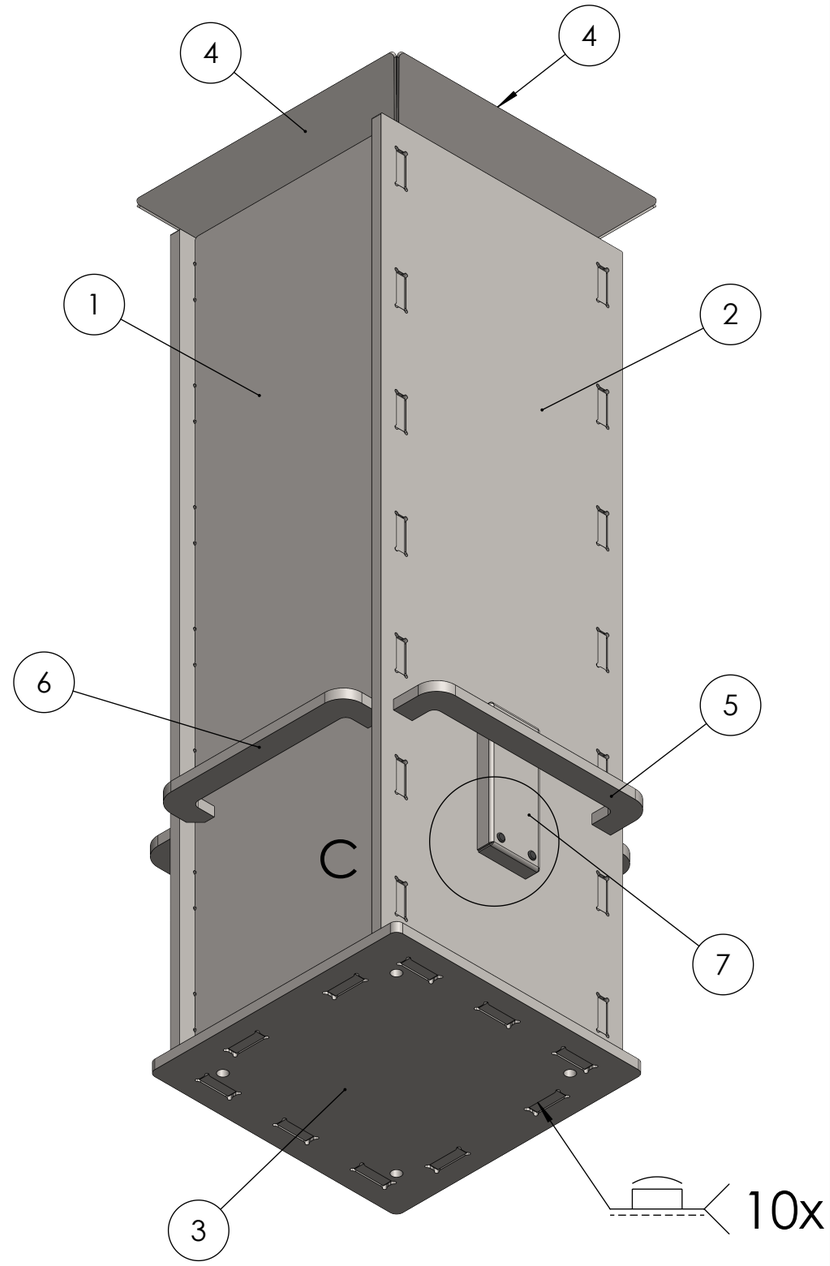

Pozicija	Detalės Nr.	Medžiaga	Storis	Masė, kg	Kiekis
1	PAV170.3.D	S355J2	15mm	43	2
2	PAV170.4.D	S355J2	15mm	50	2
3	PAV170.6.D	S355J2	15mm	18	1
4	PAV170.0031.D	S355J2	5mm	1	4
5	PAV170.7.D	S355J2	15mm	2	2
6	PAV170.8.D	S355J2	15mm	1	2
7	EGR170.14.D	S355J2	2mm	0,4	2
8	Kamstelis D10	POM	D 10-13	0,1	8

PAV170.1.M

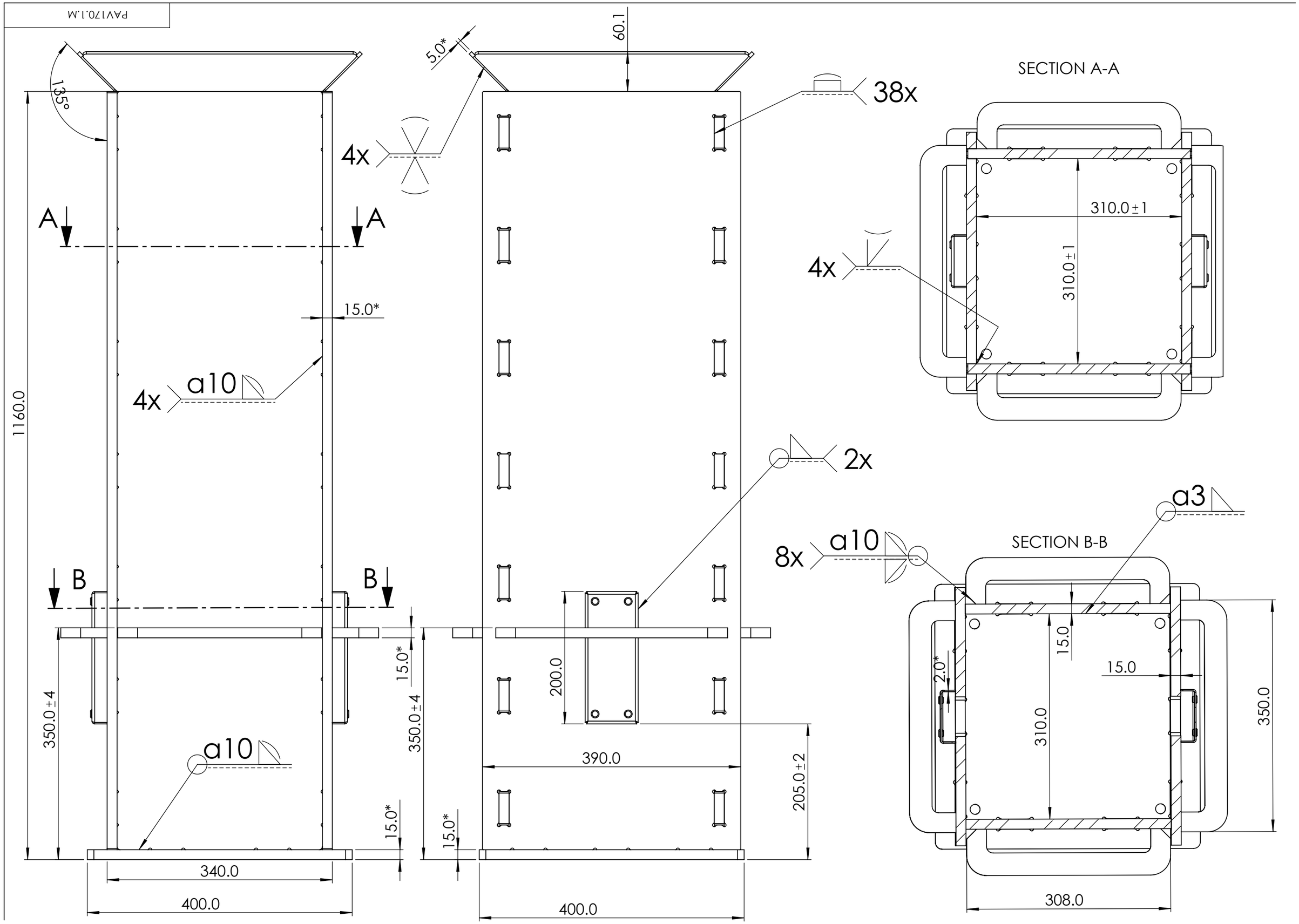
135°
A
A
B
B
1160.0
350.0±4
15.0*
4x
a10
a10
340.0
400.0
15.0*
5.0*
60.1
4x
38x
2x
8x
a10
200.0
390.0
350.0±4
15.0*
15.0*
205.0±2
400.0
SECTION A-A
310.0±1
310.0±1
4x
SECTION B-B
a3
15.0
15.0
2.0*
310.0
350.0
308.0